PURDUE PLM CENTER FACULTY FELLOW PROJECT UPDATE

Daniel DeLaurentis
Director, Center for Integrated Systems in Aerospace
Associate Professor, School of Aeronautics and Astronautics

PRODUCT LIFECYCLE MANAGEMENT
CENTER OF EXCELLENCE

PURDUE
COLLEGE OF TECHNOLOGY

Synopsis

What: Demonstrate the effectiveness of next generation design tools and integrate them with the early-phase PLM processes.

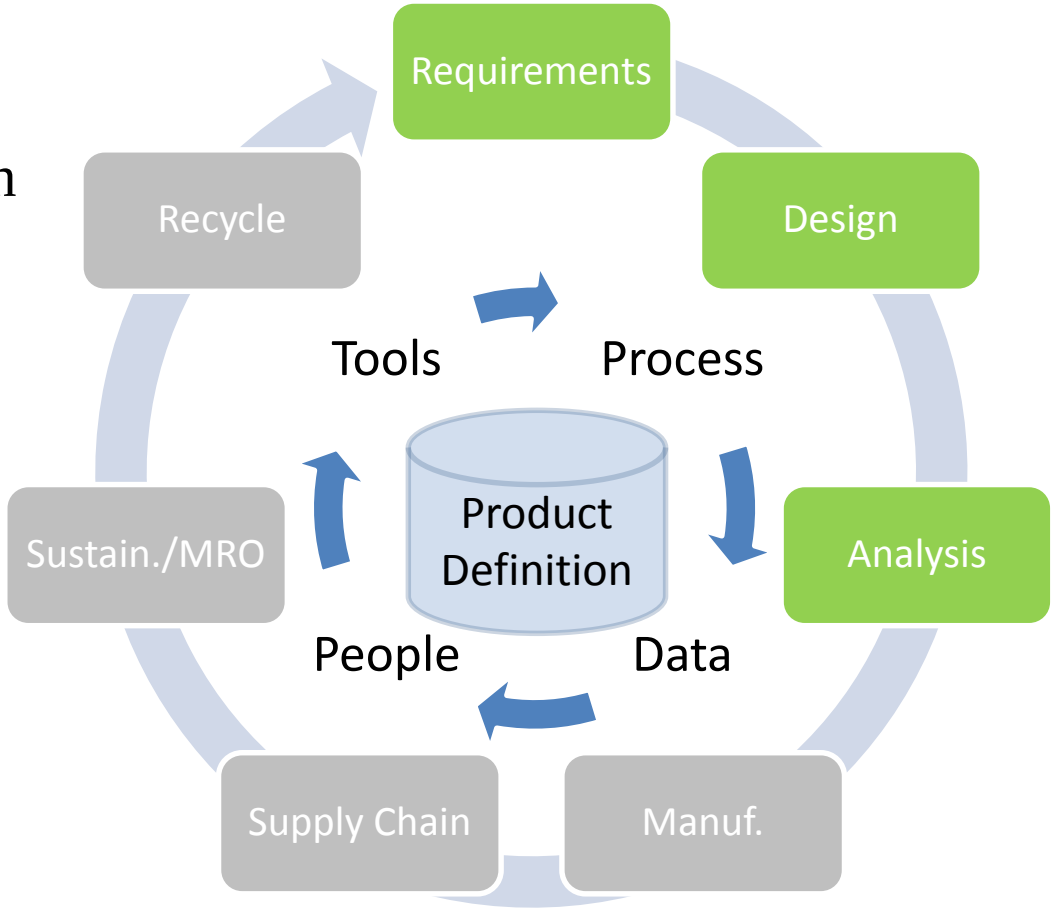

Why: Next-Gen design tools and model-based methods are expected to reduce cost and development time by effective complexity management, efficient design space exploration and designing products that are correct by construction against requirements.

Next Generation Design Process: Last Year's Focus

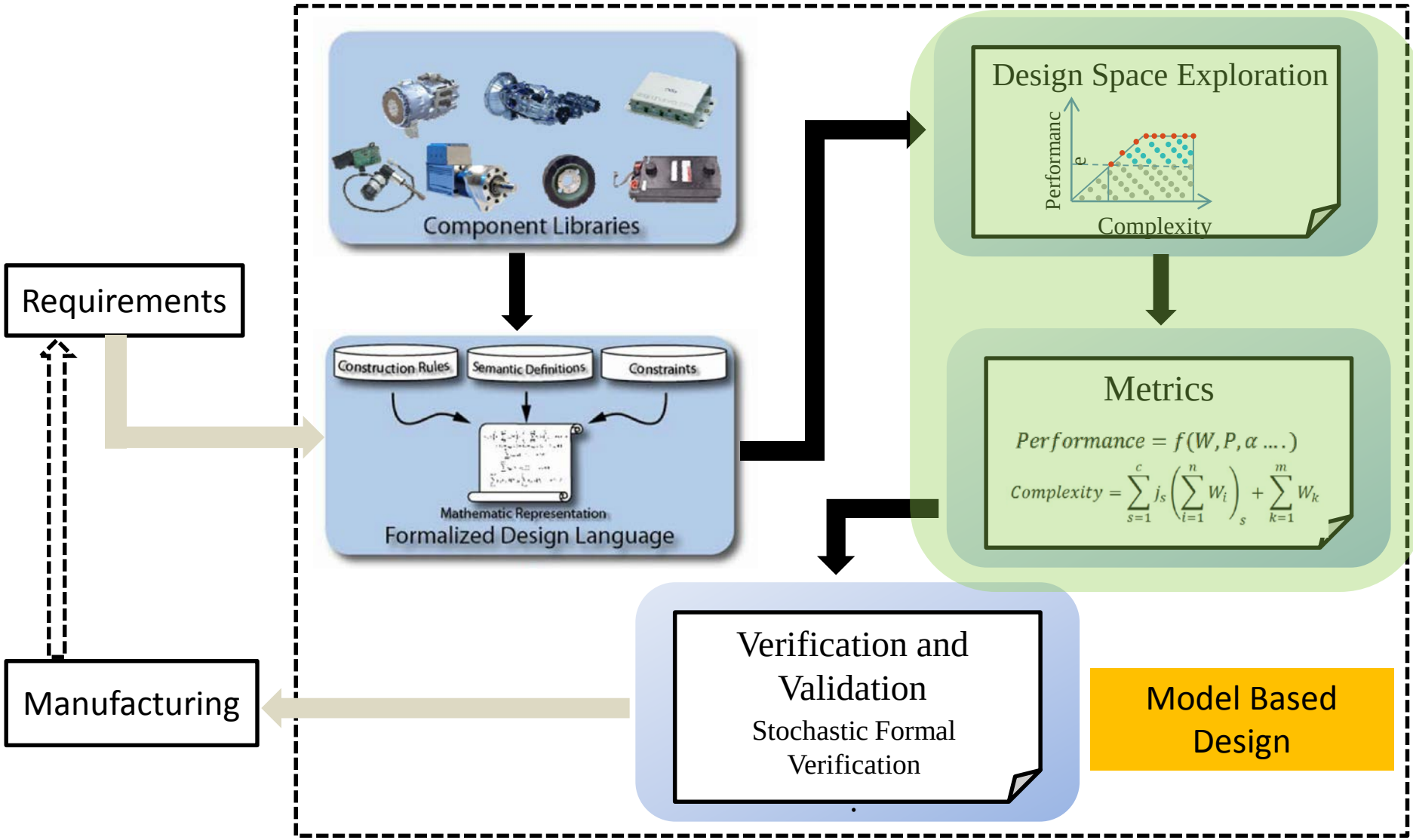

SCOPE: Towards a Metrics Guidebook

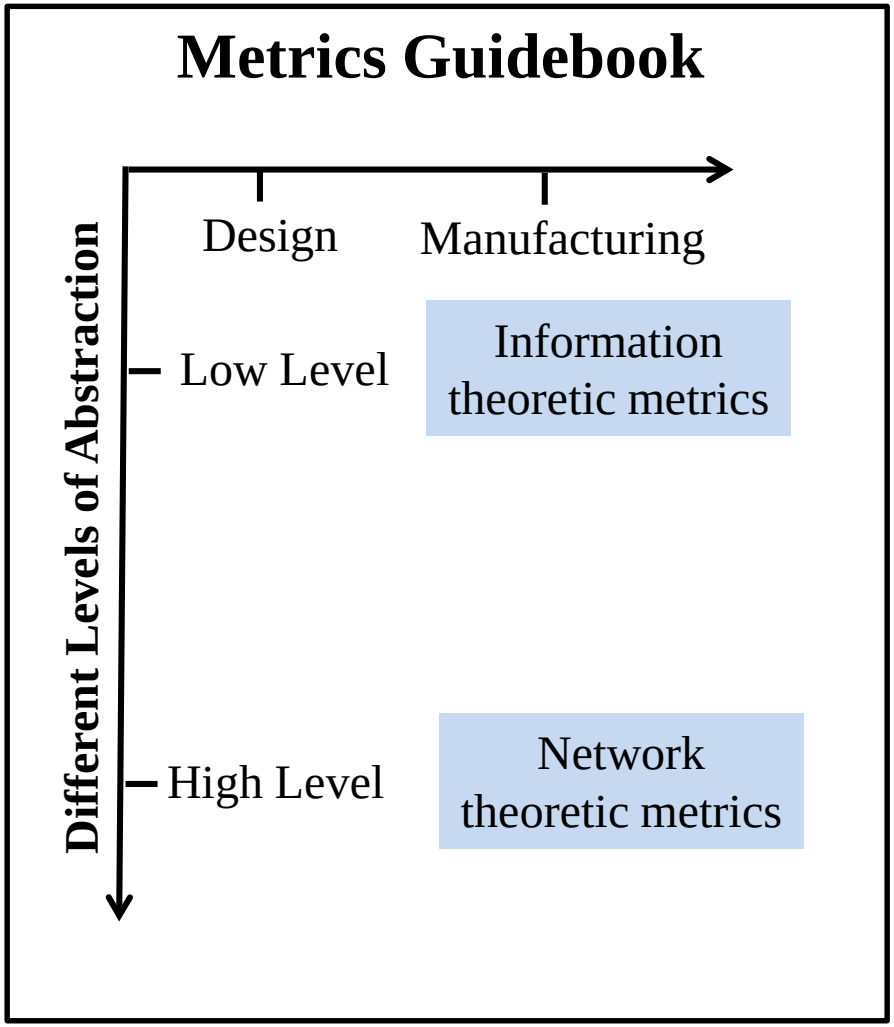

Design

Cost

Data

Type of Data depends on what metric is chosen

- Cost-Complexity relationship
- Which subsystems are complex
- Integration with Design Space Exploration Tools

Case Study

Network Theoretic Metric Example

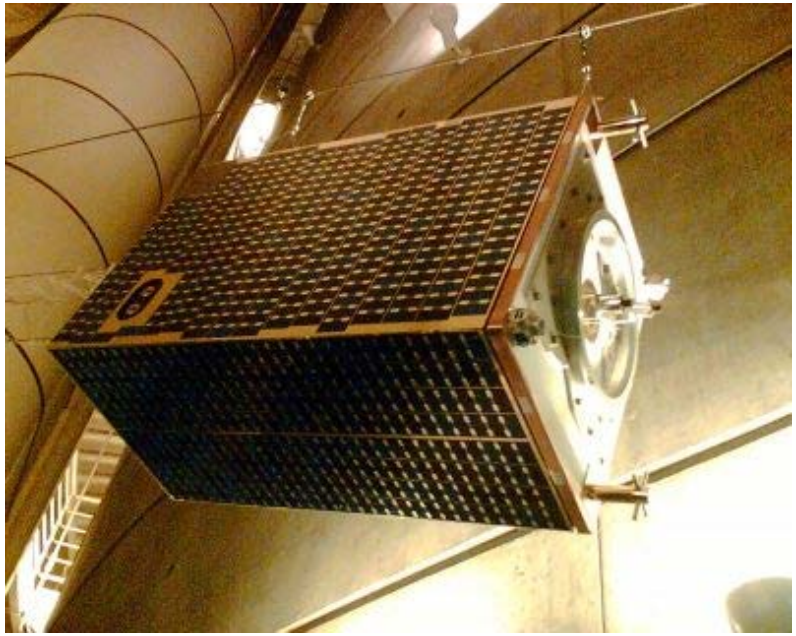

Structural Graph for Orsted

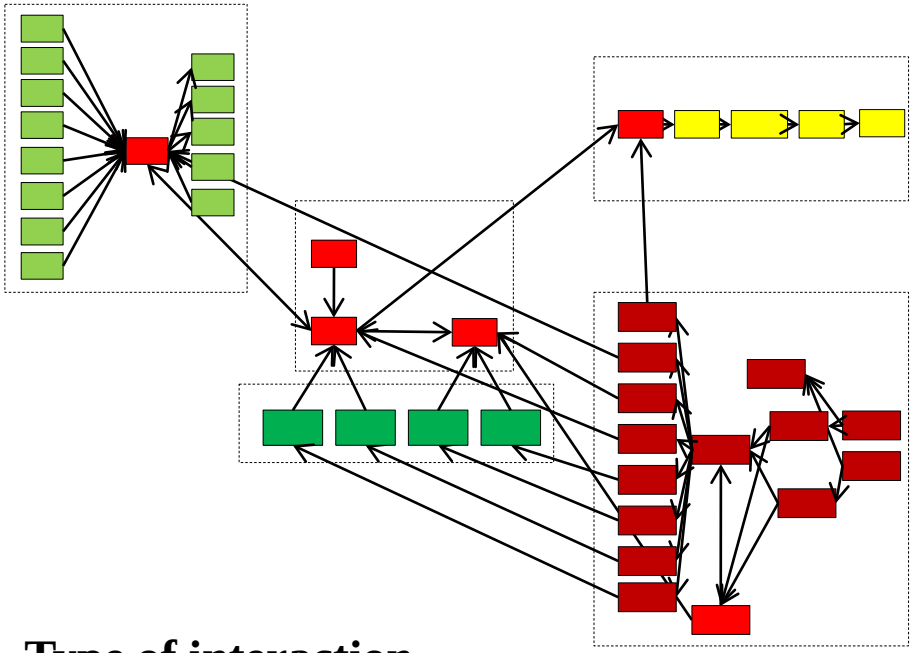

Type of interaction

Blue= information , Green= Force

Red=Energy Orange=Matter

Case Study with Network theoretic metric

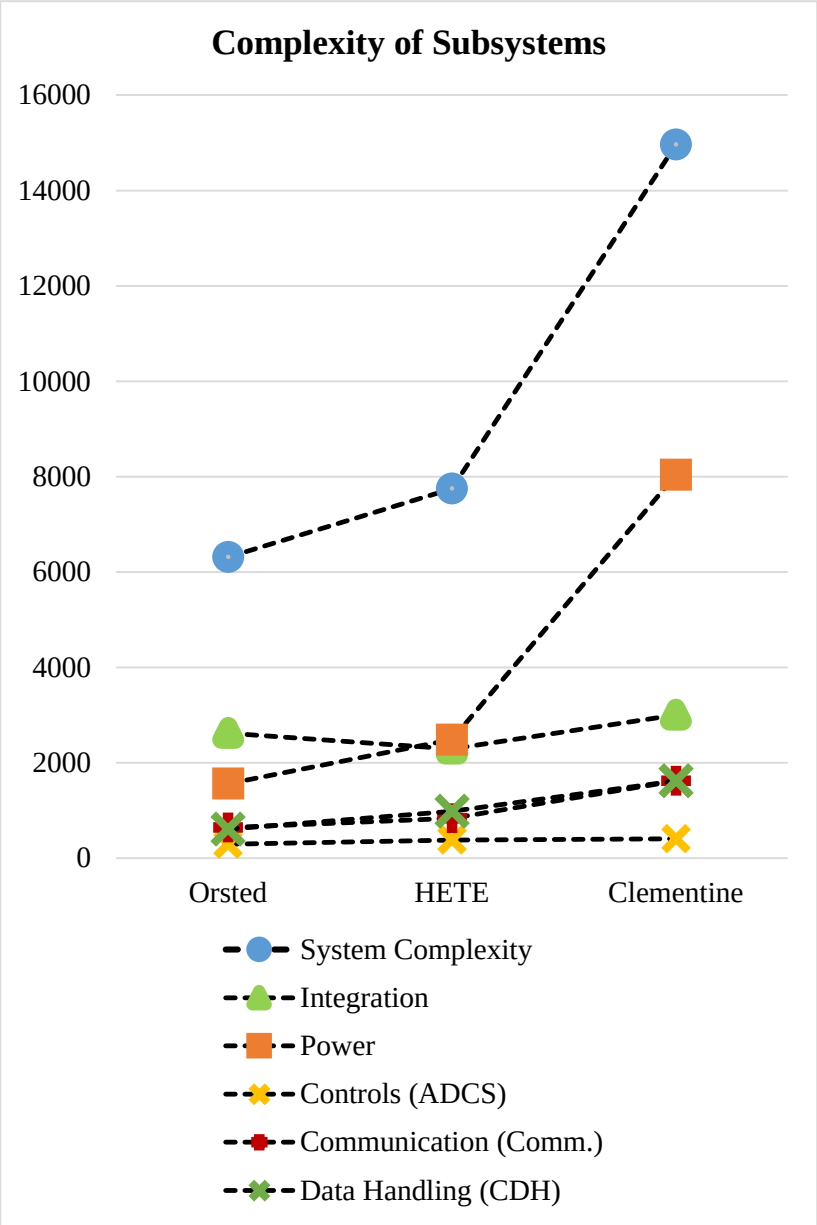

Cost vs. Complexity for three spacecraft

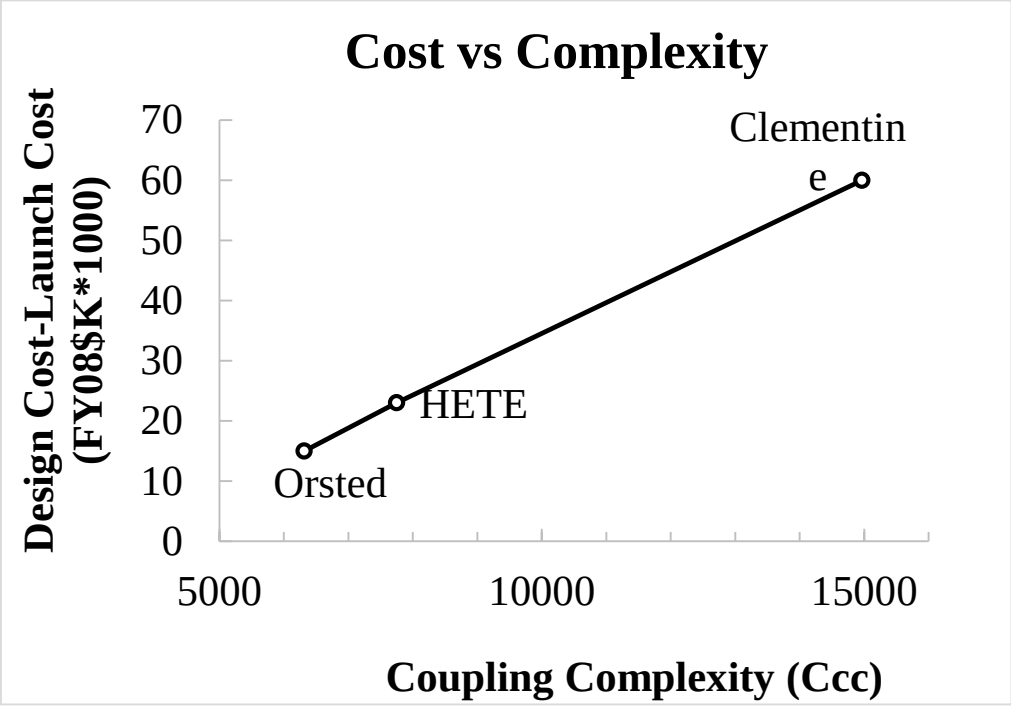

PRODUCT LIFECYCLE MANAGEMENT
CENTER OF EXCELLENCE

PURDUE
COLLEGE OF TECHNOLOGY

Key Insights

- Identified Cost-Complexity correlation for spacecraft case study.
- Formulated how this correlation can be used to analyze the impact of design changes on integration cost.
- Developed an algorithm for module identification which minimizes integration complexity.
- Demonstrated how complexity can be used with other non-traditional measures (such as flexibility and robustness) to guide decision making in a design space exploration environment.
- Companies identified product-variants ass key focus area (vice brand new product)

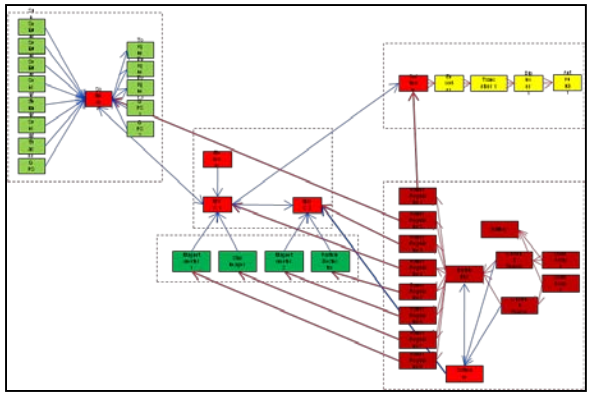

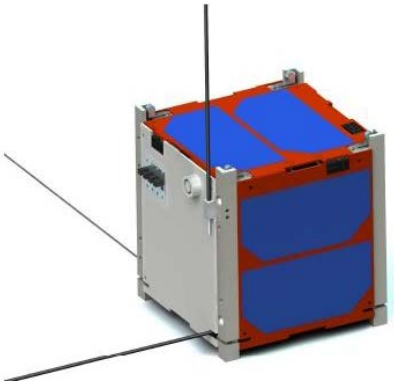

Small Satellite Design

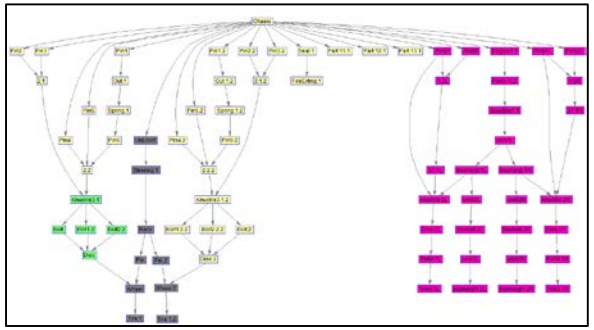

Full-Size Baja Buggy design

This Year's Focus: Connecting Models to Tools

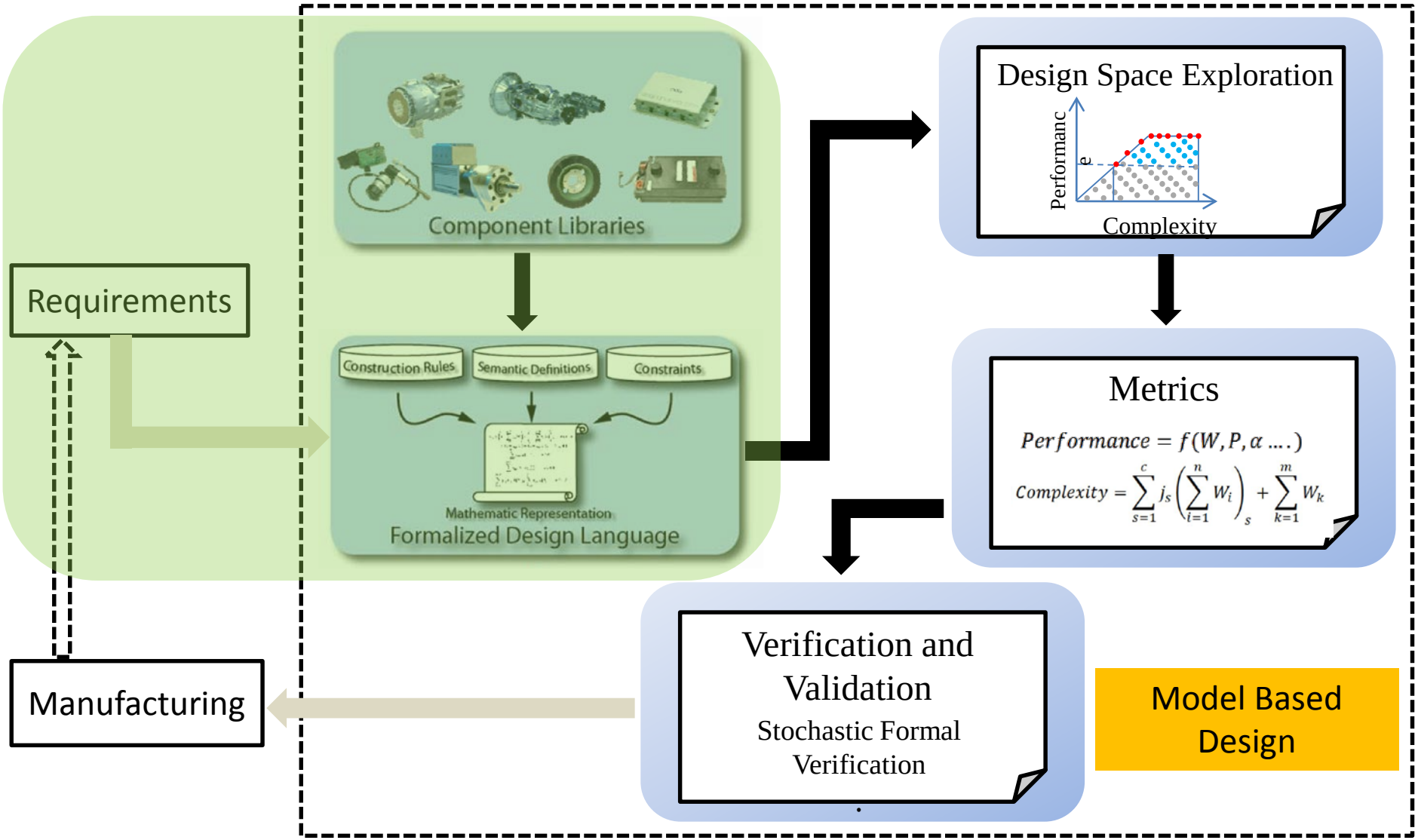

Enabling the 'Digital Thread'

Exploring Model-Based Representations

- Design Space Exploration
  - Test complexity metrics and assessment using SysML representations
- Design Simulation
  - Connecting SysML to in-house ABM tool (Discrete Agent Framework, DAF)

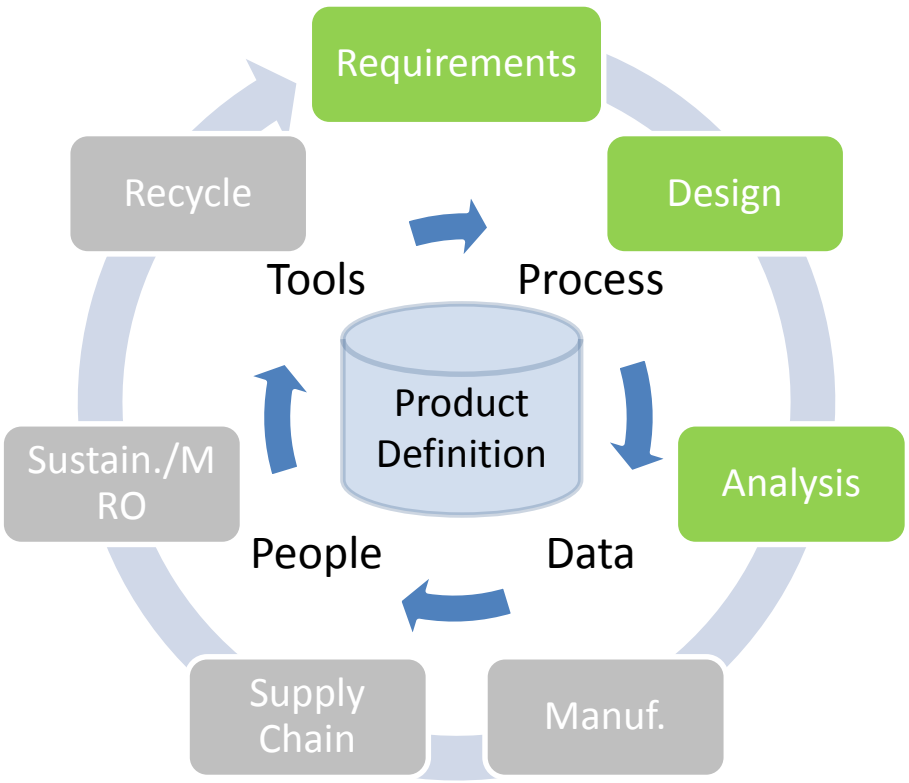

Magic Draw
- SysML representations
- ParaMagic plugin

MATLAB
- DAF
- Simulink

Systems Modeling Language (SysML)

- Four set of viewpoints to define the system
  - Structural – definition of elements
  - Behavioral – interaction, architecture
  - Requirements – requirement management (checklist)
  - Parametric – constraints via logical, mathematical expressions
- Network sets
  - Logical
    - Exchange of information between systems
    - ***What*** information is transferred between systems
  - Physical
    - Connectivity of systems
    - Over ***which*** physical paths the information is transferred

Logical Network

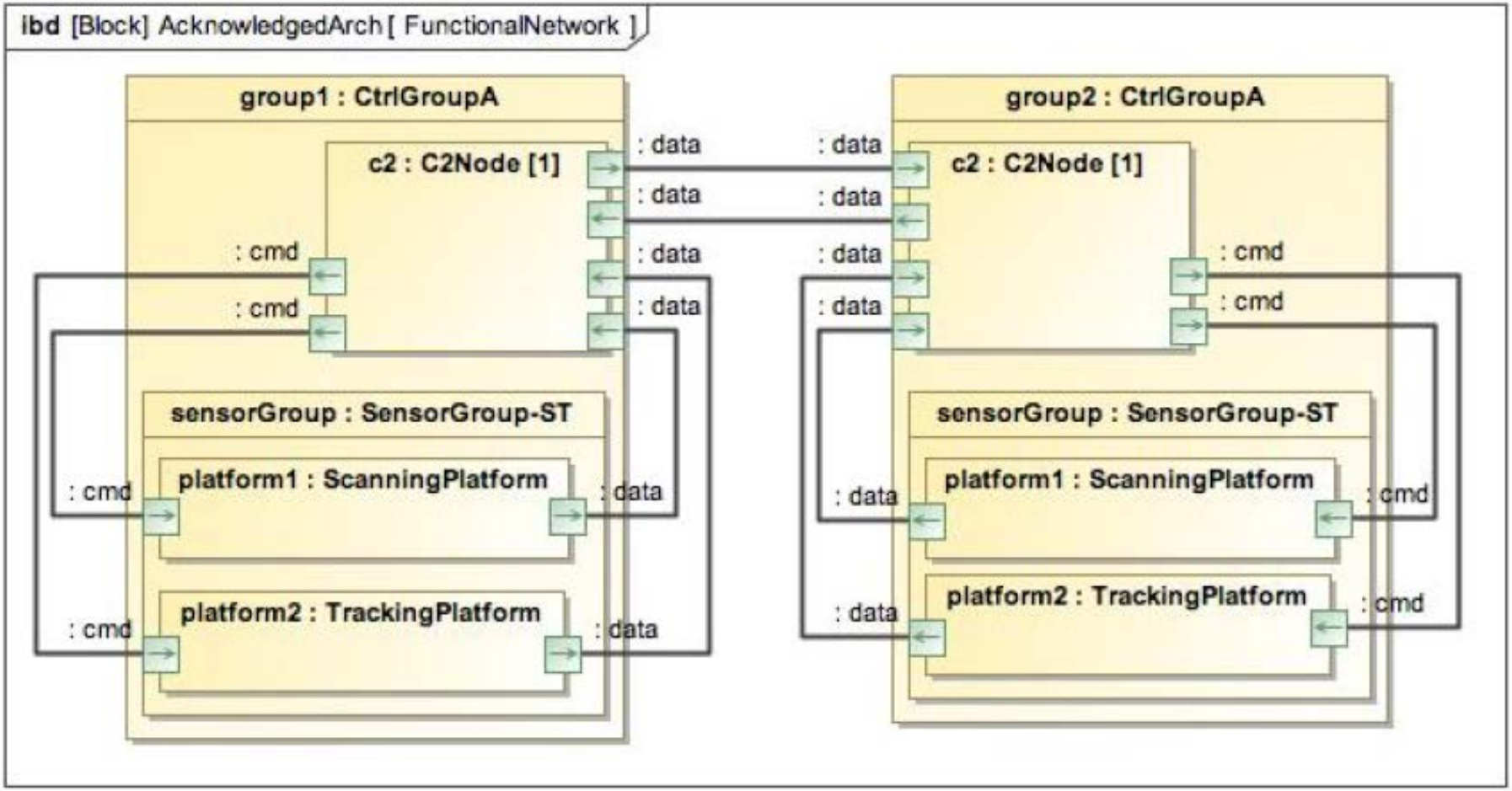

Physical Network

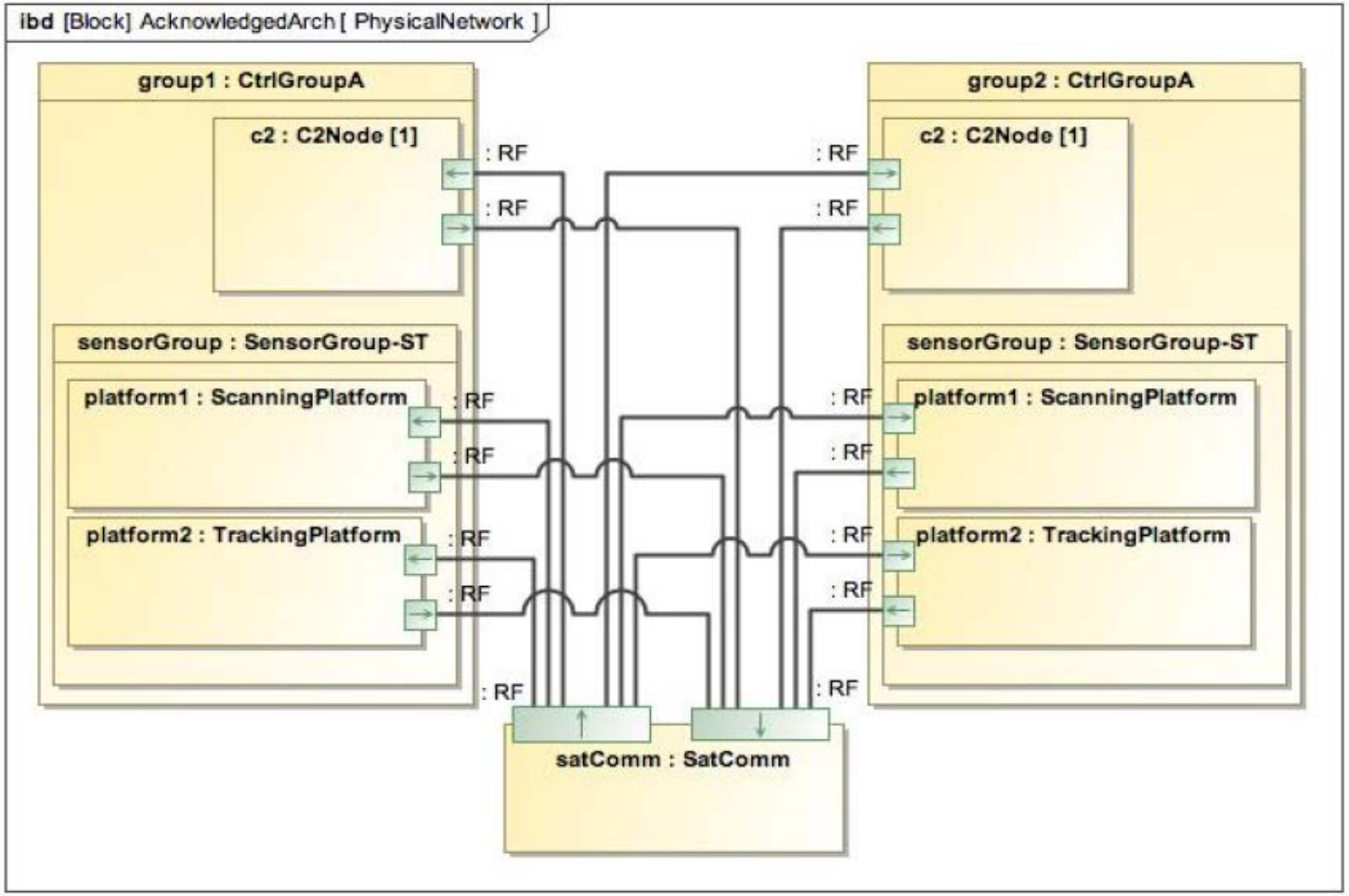

SysML Workflow

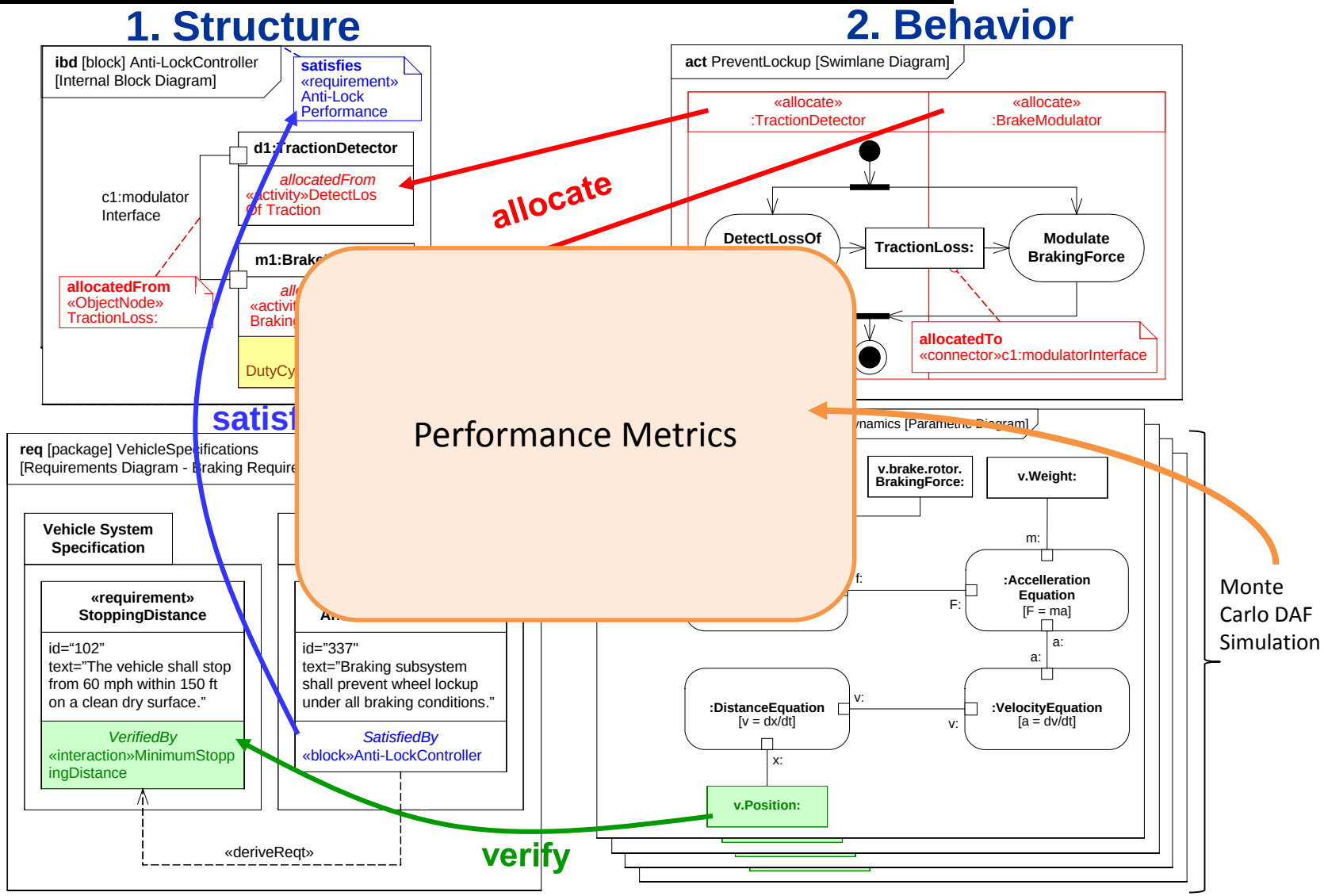

Based on Hause, Matthew C , and F. Thom. 2008. "An Integrated MDA Approach with SysML and UML." In UML&AADL 2008 Belfast, Northern Ireland: artist.

PRODUCT LIFECYCLE MANAGEMENT
CENTER OF EXCELLENCE

PURDUE
COLLEGE OF TECHNOLOGY

Thank You

SysML Basics

1. Structure

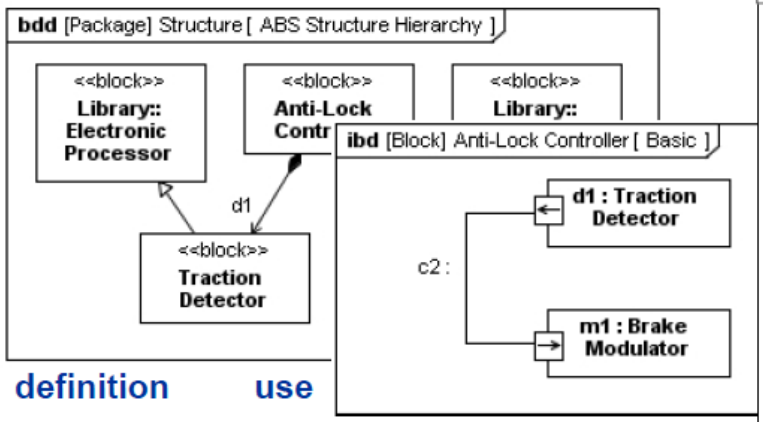

definition use

2. Behavior

interaction

state machine

activity/ function

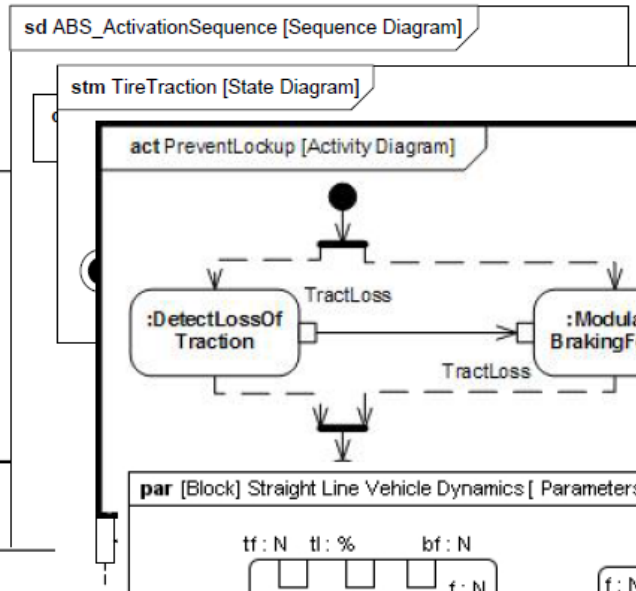

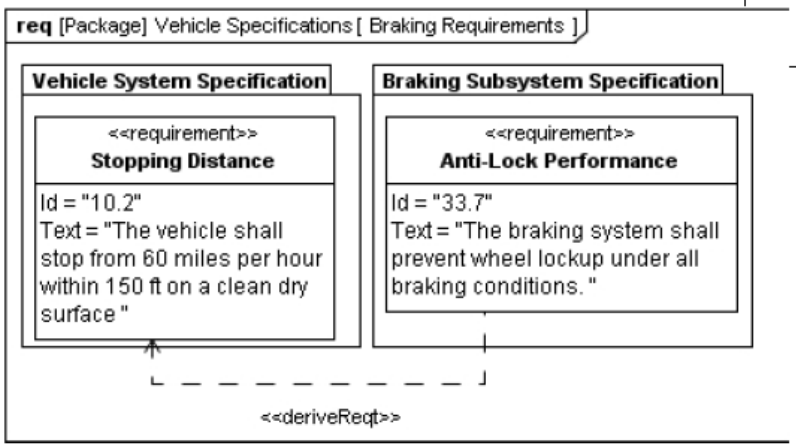

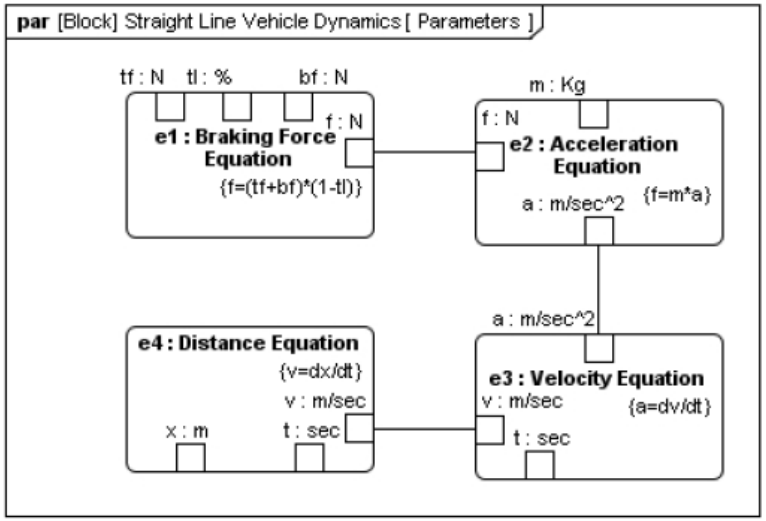

3. Requirements

4. Parametrics

Complexity enabled design-space exploration

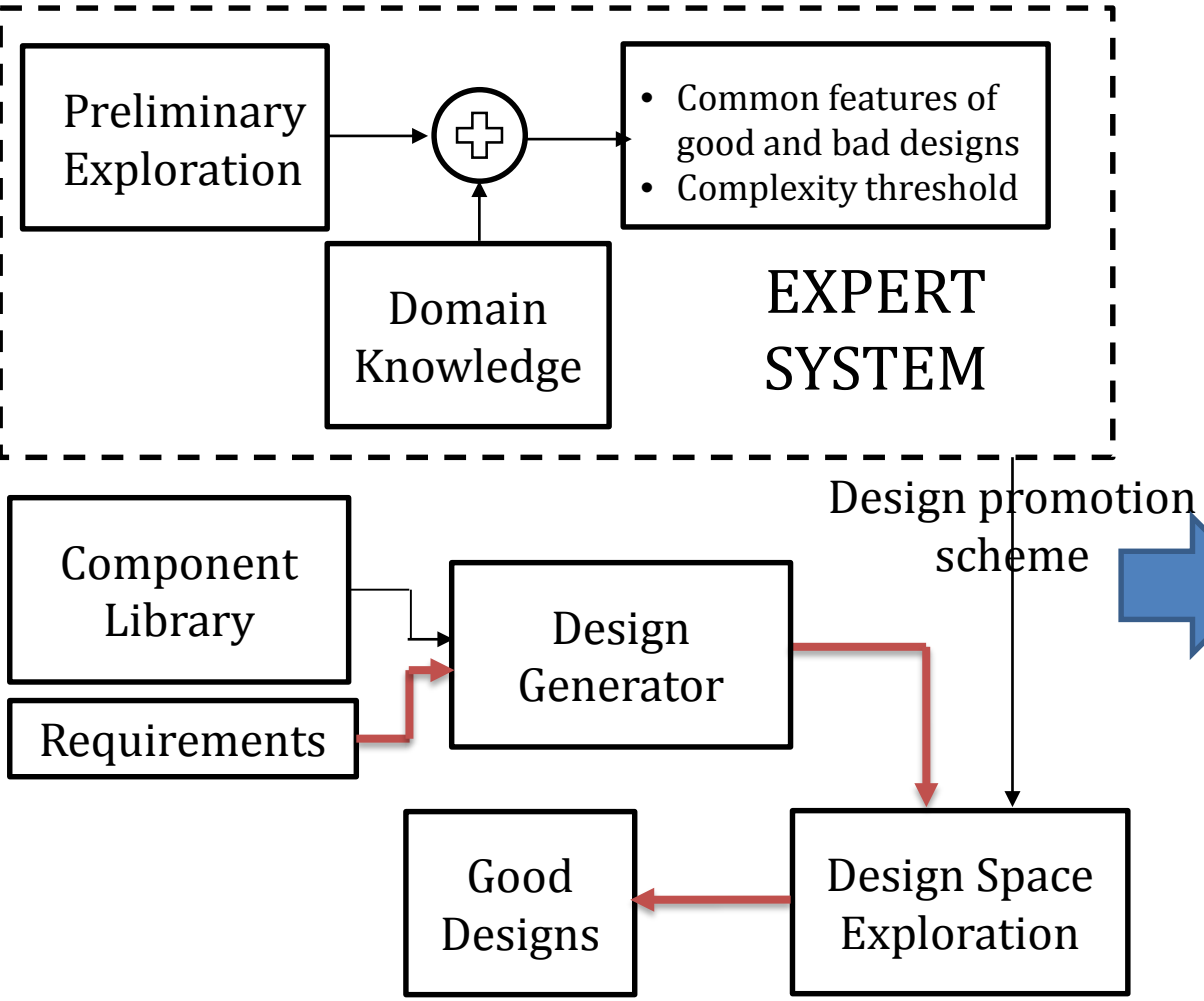

Results for Fractionated Satellite Design

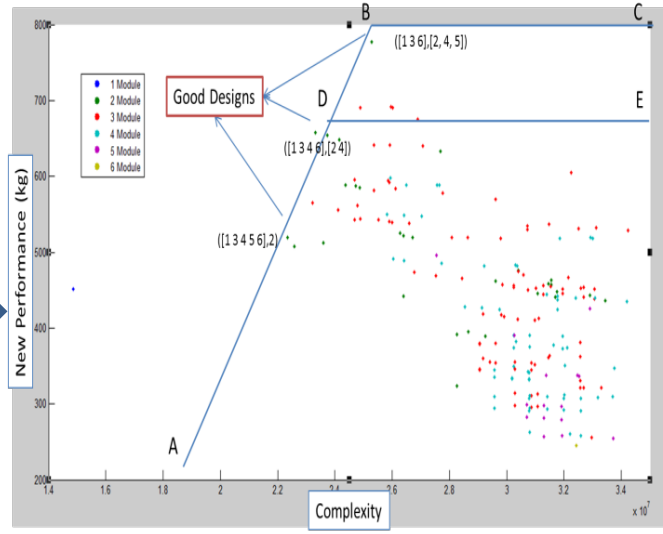

Complexity Enabled Design Space Exploration Framework

Case Study with Information Theoretic Metric

$$C(Q) = e^{(h(Q))}$$ ← Metric

Q: Joint distribution of quantities of interest
C(Q) : Complexity of the system
H(Q): Differential entropy of Q

This metric measures the potential of the system to show unexpected behavior in the quantities of interest.

Case Study

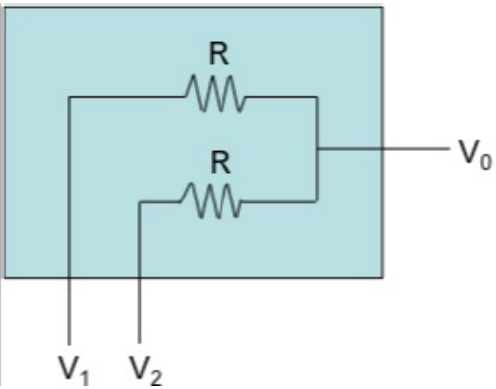

Adder Circuit

Less Information more complexity

More Information reduces complexity

Case 1: Assume V1 and V2 to jointly normal distributed.

$$h(X) = -\int_{\Omega_X} f_X(x) \log f_X(x)\, dx,$$

Complexity=5.3

Case 2: We know V1 and V2 to be independent uniformly distributed between 0 and 5V

$$V_0 = (V_1 + V_2)/2$$

V0 will have a triangular distribution with complexity of 3.39

For additional details see the attached documentation

Case Study with Information Theoretic Metric

Data Required

1. Quantities of interest (Performance, Cost etc.)
2. Functional relationship between Quantities of interest and input variables.
3. Uncertainty in variables .

Things that can be measured

1. Complexity associated with uncertainty.
2. Possibility of system to show unexpected behavior.

Case Study with Network theoretic metric

Purdue Complexity Metric (based on Network Theory) [5]

Complexity is defined as the effect of the network topology of the system

$$C_{cc} = \sum_{s=1}^{c} j_s \left(\sum_{i=1}^{n_s} W_i \right)_s + \sum_{k=1}^{m} W_k$$

Where -

W_i = weights of links of a cycle

j = size of the cycle

c = no. of cycles

W_k = weights of links not belonging to cycle

m = no. of links not participating in any cycles

n_s = no. of links participating in cycle 's'

Case Study

Structural Graph for Orsted

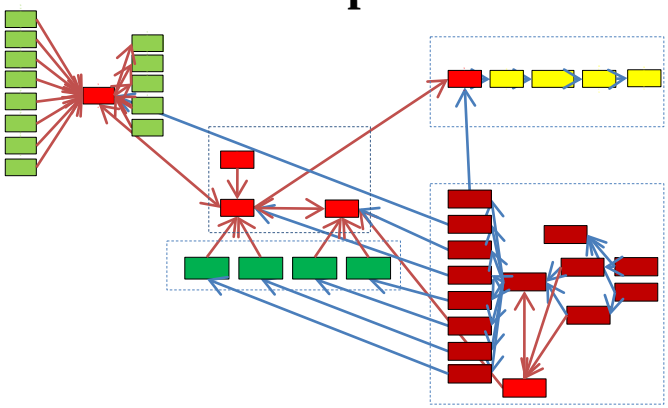

Communication

Command and Data Handling

Payload

Electrical Power System

Attitude Determination and Control Subsystem

Type of interaction

Blue= information , Green= Force

Red=Energy Orange=Matter

TIMELINE

Phase 1- Component 1

Month 1: Initial calls with PLM Center partners to identify priorities and revisit goals.

Month 2-3: Identifying available data flows, to guide choosing the appropriate metrics.

Month 4-5: Developing the ‘Metrics Guidebook’ demonstrating it on the case study.

Month 6: Writing and Publishing; Mid-project WEBEX presentation.

Phase 2- Component 2

Month 1: Understand and summarize design exploration tools used in the industry

Month 2-3: Identifying how to integrate the tool with PLM tools.

Month 4-5: Demonstrating the process on the case study.

Month 6: Writing and Publishing

Where we ended

- Next Generation Design Process
  - Model based design
- Metrics Guidebook
- Information Theoretic Metric
  - Circuit case study
- Network Theoretic Metric
  - Spacecraft case study
  - Baja buggy case study